SHARP®

LL-T15G3

[illegible]

※ TFT [illegible]

※[illegible]

※[illegible]

※[illegible]

※[illegible]

[illegible] VCCI [illegible] B [illegible]

[illegible]

※[illegible]

※[illegible]

[illegible]

[illegible]

※[illegible] Microsoft Windows XP Home Edition [illegible] Microsoft Windows XP Professional [illegible] WindowsXP [illegible] Microsoft Windows 2000 [illegible] Windows2000 [illegible] Microsoft Windows Millennium Edition [illegible] WindowsMe [illegible] Microsoft Windows 98 [illegible] Windows98 [illegible] Microsoft Windows 95 [illegible] Windows95 [illegible] Microsoft Windows Version3.1 [illegible] Windows3.1 [illegible] Windows [illegible]

※ Microsoft [illegible] Windows [illegible]

※ Macintosh [illegible]

※[illegible]

[illegible]

※[illegible]

※[illegible]

※[illegible]

※[illegible]

AC100V(50/60Hz)

⚠□ □

□□□□□□□□□□□□□□□□□□□□
□□□□□□□□□□□□□□□□□□□□
□□□□□□□□□□□□□□□□□□□□
□□

□□□□□□□□□□□□□□□□□□□□
□□□□□□□□□□□□□□□□□□□□
□□□□□□□

□□□□□□□□□□□□□□□□□□□□
□□□□□□□□□□□□□□□□□□□□
□□□□□□□□□□□□□

□□□□□□□□□□□□□□□□□□□□
□□□□□□□□□□□□□□□□□□□□
□□□□□□□□□□□□□□□□□□□□
□□

□□□□□□□□□□□□□□□□□□□□
□□

•□□□□□□□□□□□□□1□□□□□
10□□□15□□□□□□□□□□□□□□
□□□□□□
•□□□□□□□□□□□□□□□□□□□□
□□□
•□□□□□□□□□□□□□□□□□□□□
□□□□□□

□□□□□□□□□□□□□□□□□□□□
□□□□□□□□□□□□□□□□□□□□
□□□□□□□□□□□□□□□□□□□□
□□□□□□□□□□□□□□□□□□□□
□□□□□□□□□

□□□□□□□□□□□□□□□□□□□□
□□□□□(□□□□□□□□□□□□□□□
□□□□)
□□□□□□□□□□□□□□□□□□□□
□□□□□□□□□□□□

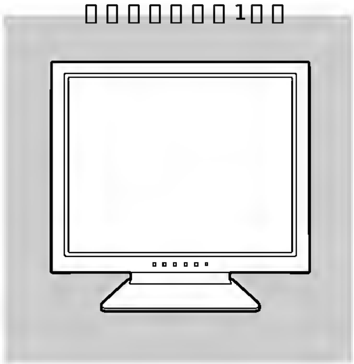

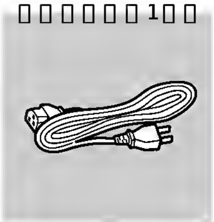

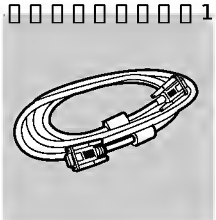

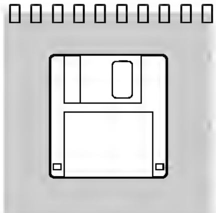

Windows/Macintosh

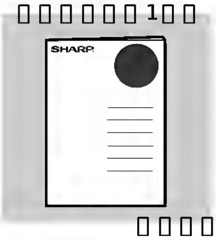

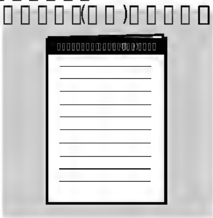

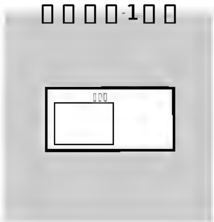

□□□□□□□□□□

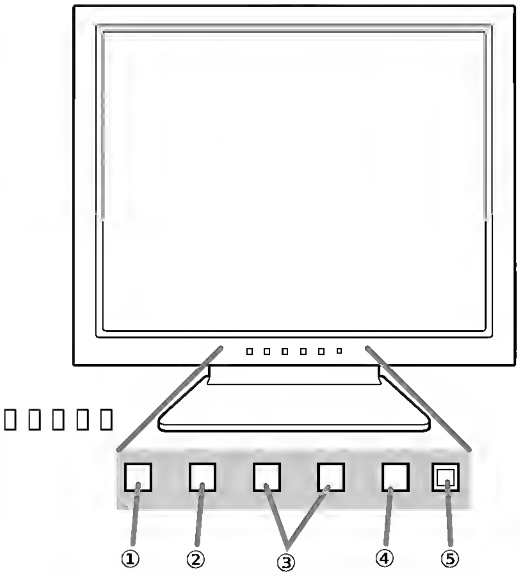

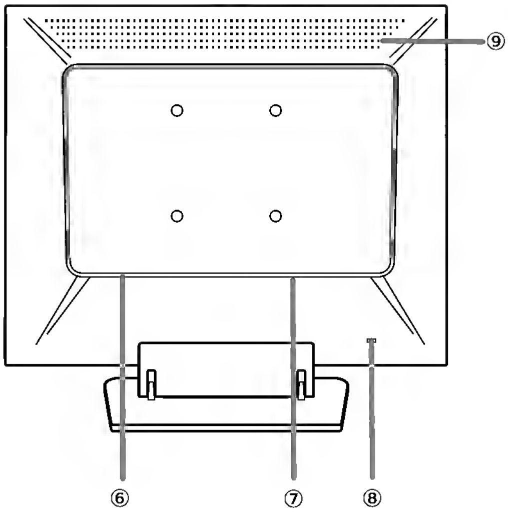

① MENU□□□ ……………□□□□□□□□□□□□□□□□□□□□□□□

② ▼□ MODE□□□ ……□□□□□□□□□□□□□□□□□□□□□□□□□□□□□□□
□□□□□□□□□□□□□□□□□□□□□□□□□□□□□□□□

③ ◀ ▶□□□ ……………□□□□□□□□□□□□□□□□□□□□□□□□□□□□□□□□□□□□□□
□□□□□□□□□□□□□□□□□□□□□□□□□□□□□□□□□□□□

④□□□□□ ………………□□□□□□□□□□□□/□□□□□□□(□□□□□□□□□□□□□□□□□□
□□□□□□□□□□□□□□□□)

⑤□□□□□ ………………□□□□□□□□□□□□□□□□□□□□□□□□□□

⑥□□□□ …………………□□□□□□□□□□□□□□□

⑦□□□□ RGB□□□□ …□□□□□□□□□□□□□□□□□□□□□□□□□□□□□ RGB□□□□□□
□□□□□

⑧□□□□□□□ …………□□□□□□□□□□□□□□□□□□□□□□□□□□□□□□□□□□□□□□
□□□□

※□□
□□□□□□□□□□□□□□□□□□□□□□□□

□□□□□□□□□□□□
□ 104-0032 □□□□□□□□□1-5-2 □□□□□□
Tel□03-3537-1070 Fax□03-3537-1071 URL□http://www.poladigital.co.jp

⑨□□□ ……………………□□□□□□□□□□□□□□□□□□□
※□□□□□□□□□□□□□□□□□□□□□□□□□□□□□□□□□□□□

■□□□□□□□□□□□□□□□□

!□□□

※□□□□□□□□□□□□□□□□□□□□□□□□□□□
□□□□□□□□□□□□□□□□□□□□□□□□□□□□
□□□□□□□□□□□□□□□□□

□□□□□□□□□□□□□

1. □□□□□□□□□□□□□□□□□□□□□□□□□□□
□□□□□□□□□□□□

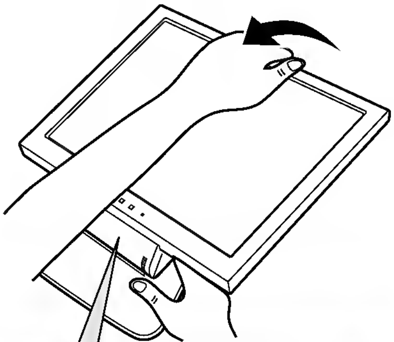

⚠ □□ □□□□□□□□□□□□□□
□□□□□□□□□□

□□□□□□□□□□□□□□□□□□□□
□□□□□□□□□□□□□□□□

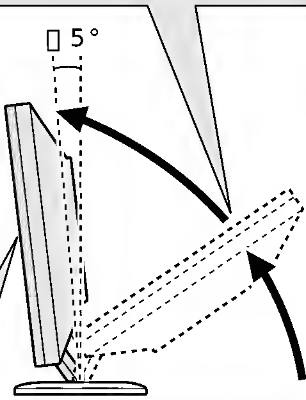

□□□□□□□□□□□□□□□□□
□□□□□□□□□□5°□□□□□□

2. □□□□□□□□□□□□

□□□□□□□□

□□□□□□□□□□□□□□□□□□□□□□□□
□□□□□□□

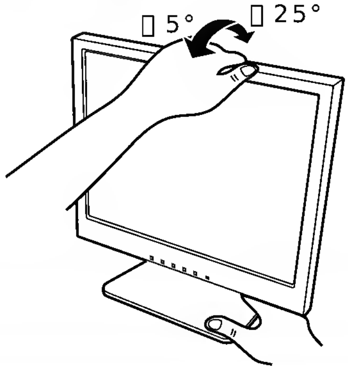

⚠ □□ □□□□□□□□□□□□□□□□□□□□
□□□□□□□□□□□□□□□□□□□□
□□□□□□□□

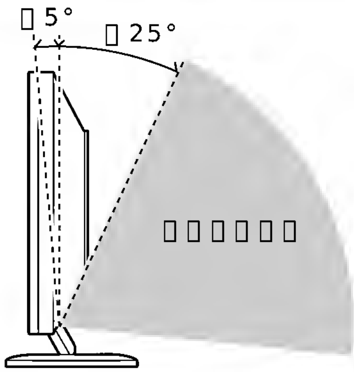

□□□□□□□□□□□(□□□)

1. □□□□□□□□□□□□□□□□□□□□
2. □□□□□□□□□□□□□□□□□□□□□□□
□□□□□□□□□□□□

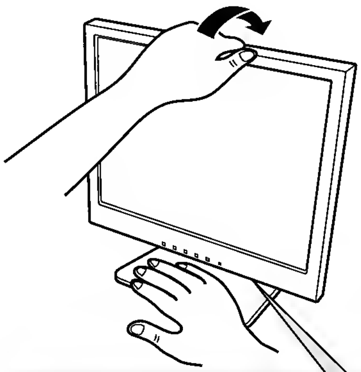

⚠ □□ □□□□□□□□□□□□
□□□□□□□□

□□□□□□□□

! □□□

※□□□□□□□□□□□□□□□□□□□□□□□□
□□□□□□□□□□□□

※□□□□□□□□□□□□□□□□□□□□□□□□
□□□□□□□□□□□□□□□□□□□□□□□□
□□□□□

□□□□□□□□□

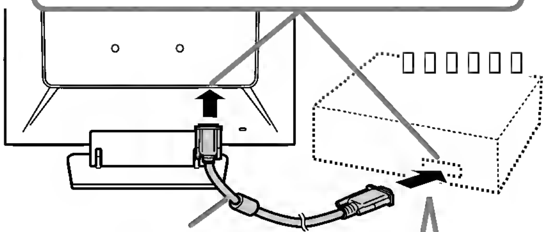

D-sub15□□ 2□□Apple Power Macintosh
□□□□□□□□□□□□□□□□□□□□□□□
□□□Macintosh□□□□□□□□(□□□)□
□□□□□□□

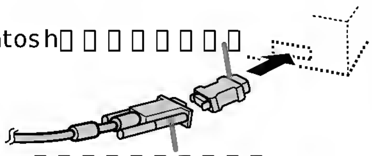

? Memo

※□□□□□□□□□□□□□□□□□□□□□□□□
□□□□□□□□□□□□□□□□□□MS-DOS
□□□□□□□□□□□□□□□□□□□□□□□□
□□□□□□□□□□□□□□□□□□□□□□□□
□□

□□□□□

□□□□□□□□□□□□□□□□□□□□□□□□□□

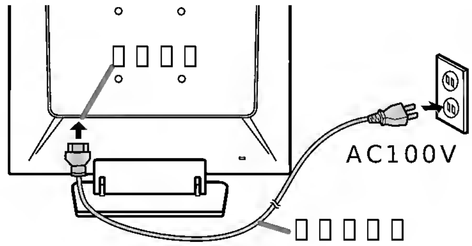

□□□□□□

1.□□□□□□□□□□□□□□□□□□□
2.□□□□□□□□□□□□□□□□□□
□□□□□□□□□□□□□□□□□□□□□□□□□□

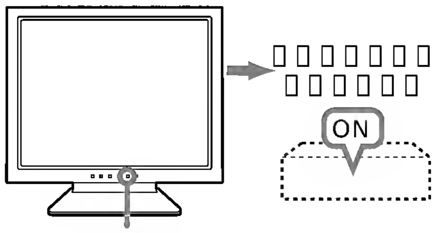

? Memo

※□□□□□□□□□□□□□□□□□□□□□□□□
□□□□□□□□□□□□□□□□□□□(14□□□)
□□□□□□□□□□□

※□□□□□□□□□□□□□□□□□□□□□□□□
□□□□□□□□□□□□□□□□□□□□□□□□
□□□□□□□□□□□□□□□□□□□

[illegible]

1. [illegible]
2. [illegible]

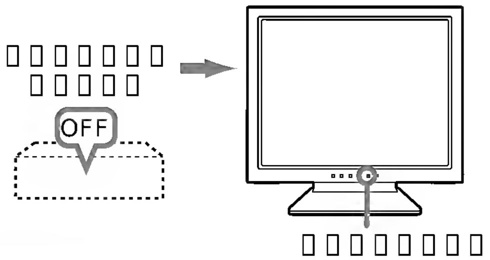

? Memo

※[illegible]

[illegible] ICC [illegible] (Windows)

[illegible] OS [illegible]

ICC [illegible] ...

ICC(International Color Consortium)[illegible] ICC [illegible]

※ ICC [illegible] Windows98/2000/Me/XP [illegible]

※ Windows98/2000/Me/XP [illegible] ICC [illegible] ICC [illegible] 11 [illegible] ICC [illegible]

※ ICC [illegible]

■[illegible]

Windows95 [illegible]

Windows95 [illegible] A [illegible]

1. [illegible] A [illegible]
2. [illegible]
3. [illegible]
4. [illegible]
5. [illegible] A:¥ [illegible] OK [illegible]
6. [illegible] OK [illegible]
7. [illegible]
8. OK [illegible]
9. A [illegible]

Windows98 [illegible]

Windows98 [illegible] ICC [illegible] A [illegible]

[illegible]

1. [illegible] A [illegible]
2. [illegible]
3. [illegible]
4. [illegible] A:¥ [illegible] OK [illegible]
5. [illegible] 2. [illegible]
6. A [illegible]

[illegible]

1. [illegible] A [illegible]
2. [illegible]
3. [illegible]
4. [illegible]
5. [illegible]
6. [illegible]
7. [illegible]
8. [illegible] A:¥ [illegible] OK [illegible]
9. [illegible]
10. [illegible]
11. OK [illegible]
12. A [illegible]

Windows2000 [illegible]

Windows2000 [illegible] ICC [illegible] A [illegible]

1. [illegible] A [illegible]
2. [illegible]
3. [illegible]
4. [illegible]
5. [illegible]
6. [illegible]
7. [illegible]
8. [illegible] A:¥ [illegible] OK [illegible]
9. [illegible]
10. [illegible]
11. [illegible]
12. OK [illegible]
13. A [illegible]

WindowsMe [illegible]

WindowsMe [illegible] ICC [illegible] A [illegible]

[illegible]

1. [illegible] A [illegible]
2. [illegible]
3. [illegible]
4. [illegible] A:¥ [illegible] OK [illegible]
5. [illegible]
[illegible] 2. [illegible]
6. A [illegible]

[illegible]

1. [illegible] A [illegible]
2. [illegible]
3. [illegible]
4. [illegible]
5. [illegible]
6. [illegible]
7. [illegible]

8. A:¥ OK
9.
10.
11. OK
12. A

Windows XP

Windows XP ICC A

1. A
2.
3.
4.
5.
6.
7.
8.
9. A:¥ OK
10.
Windows ...
11.
12.
13. OK
14. A

■ ICC

ICC ( )
A

1. A
2.
3.
4.
5.
6. 3.5 FD(A:)
7.
8.
9. OK
10. A

? Memo

※ ICC

[illegible]ColorSync[illegible] (MacOS)

ColorSync[illegible]…

ColorSync[illegible]ColorSync[illegible]

※[illegible] ColorSync[illegible] MacOS8.5[illegible]

※ ColorSync[illegible]

■ ColorSync[illegible]

※[illegible]PC Exchange[illegible]File Exchange[illegible]

※[illegible] OS [illegible]

1. [illegible]
2. [illegible] Mac [illegible] ColorSync[illegible]
3. [illegible] ColorSync[illegible]

(14)

(15)

? Memo

※

1.

2. MENU ▼ MODE

? Memo

※

※

1.

2. MENU ◀

1.

2. MENU

1.

2. MENU

1. ◀ ▶

31

2. ◀ ( ) ▶ ( )

sRGB …… IEC(International Electrotechnical Commission)

…

※ sRGB

▼ / MODE →

sRGB → → …

□□□□□□□

□□□□□□□□□□□□□□□□□□□□□□□□
□□□□□□□□□□□□□□□

? Memo

※□□□

■□□□□□□□□□□□□□□□□

□□
Windows □□□

□□□□□□□□(Windows □□)□□□□□□□ Windows95/98/2000/Me/XP □□□□□□□□□□□□□□□□□□□□□A□□□□□□□□□□□□□□□

※□□□□□□□□□□□□□□□□□□□□□□□ □□ A □□□□□□□□□□□□□A□□□□□□ □A:□ □□□□□□□□□□□□□□□□□□□□□□□

1. □□□□□□□□□□□□□□□□□□□□□□ A □□□□□□□□□□□
2. □□□□□□□□□□ □□ □3.5 □□□ FD(A:)□□□□□ Windows3.1 □□□□ □□□□□□□□□□□□□□□□□□ □A□□□□□□□□□□□□□□
3. □Adj_uty.exe□□□□□□□□□□□□□□□□□□□□□□□□□□□□□□□
   □□□□□□□□□□□□□□□

   □□□□□□□□

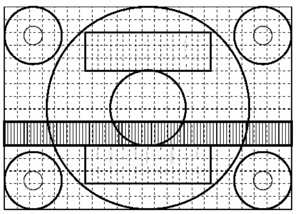

□□□□□□□□□□□□□□□□□□□□□[ESC]□□□□□□□□□□□□□□□□□□□□□□□□□□

? Memo

※□□□□□□□□□□□□□□□□□ 6 □ 5 □□□ □□□

■□□□□□□□□□□

1. MENU □□□□□□□
   □□□□□□□□□□□□□□□□□□□□□□□□□

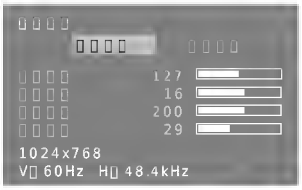

2. ▶□□□
3. MENU □□□□ 4 □□□□□□□□□□□□□□□□□□□

? Memo

※□□□□□□□□□□□□□□□□□□□□□□□□□
※ 1 □□ 2 □ 3 □□□□□□□□□□□□□□
※□□□□□□□□□□□□□□□□□□□□□□□□□□□□□□□□□□□□□(15 □□□)
- □□□□□□□□□□□□□□□
- □□□□□□□□□□□□□□□□□□□□□□□□□□□(□□□)
- □□(□□□□□□□□□□□□□□□□□□□□□□□□□□□□□)

※□□□ MS-DOS □□

□□□□□□□

□□□

1. □□□□□□□□□□□□□□□□□□□□□□□□□□□□□□□□ Windows □□(14□□□)
2. MENU □□□□□□□□
   □□□□□□□□□□□□□□□□□□□□□□□□

   □□□□□□□□□□□□□□□□□□□□□□□
   MENU □□□□□□□□□□□□□□□□□□□□□□□□□□□□□□□□□(□□□□→□□□□→□□□→□□□□□→□□□□□□□□)

? Memo

※□□□□□□□□□□□□□□□□□□□□□□□□□□ 30□□□□□□□□□□□□□□
※□□□□□□□□□□□□□□□□(Windows□)□□□□□□□□□□□□□□□□□□□□□□□□□□□□

□□□□□□□□□□

□□□□ .....□□□□□□□□□□□□□□□□□□□□□
□□□□ .....□□□□□□□□□□□□□□□□□□□□

※▶□□□□□□□□□「□□□□」□□□□□□□□□□
※□□□□□□　□▼□ MODE□□□□
※□□□□□□□□□MENU□□□□

□□□□

□□□□□□□□□□□□□□□□□□□□□□□□□□□□□□□□□□(◀ ▶□□□□)

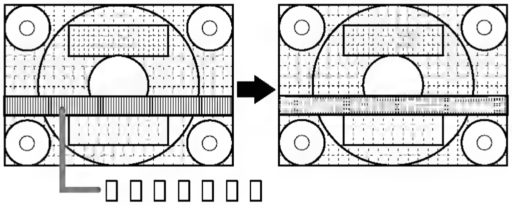

□□□□

□□□□□□□□□□□□□□□□□□□□□□□□□□□□□□□□□□(◀ ▶□□□□)

※「□□□□」□□□□□□□□□「□□□□」□□□□□□□□□□□□□□□□□□□□□□

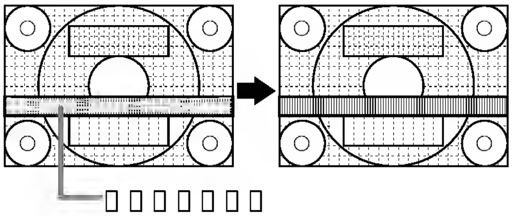

□□□□□□□□□□□

□□□□□□□□□□□□□□□□□□□□□□□□□(□□□□)□□□(□□□□)□□□□□□□□□□□□(◀ ▶□□□□)

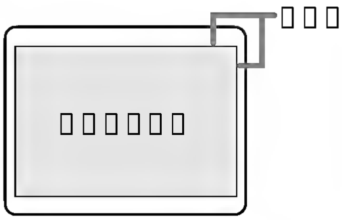

□□□□□□□□

□□□□ .....□□□□□□□□□□□□□□□□
□□□□ .....□□□□□□□□□□□□□□□ *□□□
□□□□□□□□□□□□□□□□□□□
□□□□□□□□□□□

※▶□□□□□□□□□□□□□□□□□□□□□□□
※□□□□□ □ ▼□ MODE□□□
※□□□□□□□□ MENU□□□

*□□□□□□□□□□□□□□
※□□□□□□□□□□□□□□□□□□□□□□□
□□□□□□□□□□□□□□□□□□□□□□□□
□□□□□□□□□□□□□□□ 5mm × 5mm□□
□□□□□□□□□□□□□□□□□□□□□□□□
□□□□□□□□□□□□□□□□□□□□□□□□
※□□□□□□□□□□□□□□□□□□□□□□□□
□□□□□□□□□□□□□□□□□□□□□□□□
□□□□□□□□□□□□□□□□□□□□□□□□
□□□□
※□□□□□□□□□□□□□□□□□□□□□□□□
□□□□□□□□□□□□□□
※□□□□□□□□□□□□□□□□□□□□□□□□
□□□□□□□□□□□□□□□□□□□□□□□□
□□□□□□□□□□□□□□□□□□□□□□□□
□□□□□□□□□□□

□□□□
□□□□□□□□□□□□□□□□□□□□□□□□
□□□□(◀ ▶□□□)

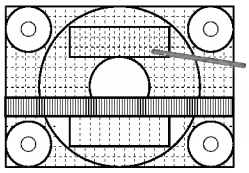

□□□□□□□

□□□□□□□□□□□□□□□□□□□□□□□□
□□□□□□□□□□□(◀ ▶□□□)

□□□□□□□

※□□□□□□□□□□□□□□□□□□□□□□□□
□□□□□□□□□□□□□□□□□□□□□□□□
□□□□□□□□□□□
※□□□□□□□□ sRGB□□□□□□□□□□□□
□□□□□□□□□□□□□□□□□□□□□□□
※◀ ▶□□□□□□□□□□□□□□□□□□□□□
□□□□□□□□□□□□
※□□□□□□□□□□□□□□□□□□□□□□□□
□□□□□□□□□□□□□□□□□□□□□□□□
□□□□□□□□□□□□□□□□□□□□□□□□
※ ▼□ MODE□□□□□□□□□□□□□□□□□□
□□□□□□□□□□□□□□□□□□□□□□□□
※□□□□□□□□ MENU□□□

□□ .....□□□□□□□□□□□□□□□□□
• .....□□□□□□□□□□□□□□□□□□□
□□ .....□□□□
• .....□□□□□□□□□□□□□□□□□□□
□□ .....□□□□□□□□□□□□□□□□□
□□□□□□
□□□□□□□□ .....◀□□□□□□□□
▶□□□□□□
□□□□□□□□ .....◀□□□□□□□
▶□□□□□□
□□□□□□□□ .....◀□□□□□□□
▶□□□□□□

□□□□□□□□□

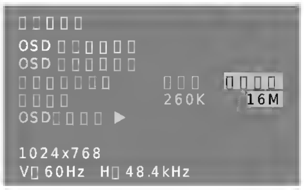

※□□□□□□□□□□□□□□□□□□□□□□□
□□□□□□□□□□□□□□□□□□□□
※□□□□□□▼□MODE□□□
※□□□□ □MENU□□□

OSD□□□□□□
□□□□□□□□□□□□□□□□□□□□□
(◀▶□□□)

OSD□□□□□□
□□□□□□□□□□□□□□□□□□□□□
(◀▶□□□)

□□□□□□□
□□□□□□□□□□□□□□□□□□□□□□□□
□□□□□□□◀▶□□□□
※1024×768□□□□□□□□□□□□□□□□
□□□□□□□□□□□□□□□□□□□□□(□□
□□□□(□□□)□□□□□□□□□□□□)

□□□□
□□□□□□□□□□□□□◀▶□□□□
260K□□26□□
16M □□1619□□

OSD□□□□
□□□□□□□□□□□□□□□□□□□□□□
1□▶□□□□□□□
□□□□□□□□□□□□□□□□
2□▼□MODE□□□□□□□□□□□□
3□MENU□□□□□□□
□□□□□□□□□□□□□□□

[illegible]

[illegible]

[illegible]

■[illegible]

[illegible]

■[illegible]

[illegible]

! [illegible]

※[illegible]

※[illegible]

? Memo

※[illegible]

[illegible]

[illegible]

! [illegible]

※[illegible]

□□□□□□□□□□

□□□□□□□□□□□□□□□□□□□

[illegible]

[illegible] ..... [illegible]
[illegible] ..... [illegible]
※[illegible](2002[illegible] 11[illegible])

[illegible]

[illegible]
[illegible]※[illegible] 9[illegible] 6[illegible] ※[illegible] 10[illegible] 5[illegible] ([illegible])

[illegible]
0570-01-4649
[illegible]
[illegible]
[illegible]NTT[illegible]
([illegible])[illegible]PHS[illegible]
[illegible]

[illegible]PHS[illegible] .....[illegible] 043-351-1831 [illegible] 06-6792-5613

◎[illegible]
[illegible]
[illegible]※[illegible] 9[illegible] 5[illegible] 30[illegible] ([illegible])

[illegible]	[illegible]	[illegible]	063-0801	[illegible]	[illegible]	[illegible]	500-8358	[illegible]	
[illegible]	[illegible]	[illegible]	080-0011	[illegible]	[illegible]	[illegible]	514-0102	[illegible]	
	[illegible]	[illegible]	050-0074	[illegible]		[illegible]	510-0063	[illegible]	
	[illegible]	[illegible]	085-0051	[illegible]	[illegible]	[illegible]	930-0906	[illegible]	
	[illegible]	[illegible]	070-0031	[illegible]	[illegible]	[illegible]	921-8801	[illegible]	
	[illegible]	[illegible]	040-0001	[illegible]	[illegible]	[illegible]	918-8206	[illegible]	
[illegible]	[illegible]	[illegible]	030-0121	[illegible]	[illegible]	[illegible]	520-2151	[illegible]	
	[illegible]	[illegible]	036-8101	[illegible]	[illegible]	[illegible]	601-8102	[illegible]	
	[illegible]	[illegible]	031-0802	[illegible]		[illegible]	620-0054	[illegible]	
[illegible]	[illegible]	[illegible]	010-0941	[illegible]	[illegible]	[illegible]	556-0003	[illegible]	
[illegible]	[illegible]	[illegible]	020-0891	[illegible]		[illegible]	547-8510	[illegible]	
	[illegible]	[illegible]	026-0041	[illegible]		[illegible]	597-0062	[illegible]	
[illegible]	[illegible]	[illegible]	984-0002	[illegible]		[illegible]	563-0043	[illegible]	
[illegible]	[illegible]	[illegible]	990-2332	[illegible]	[illegible]	[illegible]	658-0082	[illegible]	
	[illegible]	[illegible]	998-0859	[illegible]		[illegible]	671-2222	[illegible]	
[illegible]	[illegible]	[illegible]	963-0111	[illegible]	[illegible]	[illegible]	639-1103	[illegible]	
	[illegible]	[illegible]	970-8033	[illegible]	[illegible]	[illegible]	641-0031	[illegible]	
[illegible]	[illegible]	[illegible]	950-0993	[illegible]		[illegible]	646-0051	[illegible]	
[illegible]	[illegible]	[illegible]	320-0833	[illegible]	[illegible]	[illegible]	680-0802	[illegible]	
[illegible]	[illegible]	[illegible]	371-0855	[illegible]	[illegible]	[illegible]	701-0301	[illegible]	
[illegible]	[illegible]	[illegible]	310-0851	[illegible]	[illegible]	[illegible]	690-0017	[illegible]	
[illegible]	[illegible]	[illegible]	330-0038	[illegible]	[illegible]	[illegible]	731-0113	[illegible]	
[illegible]	[illegible]	[illegible]	130-0011	[illegible]		[illegible]	739-0142	[illegible]	
	[illegible]	[illegible]	143-0025	[illegible]		[illegible]	720-0841	[illegible]	
	[illegible]	[illegible]	114-0013	[illegible]	[illegible]	[illegible]	754-0024	[illegible]	
	[illegible]	[illegible]	191-0003	[illegible]		[illegible]	744-0011	[illegible]	
[illegible]	[illegible]	[illegible]	261-8520	[illegible]	[illegible]	[illegible]	760-0065	[illegible]	
	[illegible]	[illegible]	270-2231	[illegible]	[illegible]	[illegible]	770-0813	[illegible]	
	[illegible]	[illegible]	289-2132	[illegible]	[illegible]	[illegible]	791-8036	[illegible]	
	[illegible]	[illegible]	292-0801	[illegible]	[illegible]	[illegible]	780-8123	[illegible]	
[illegible]	[illegible]	[illegible]	235-0036	[illegible]	[illegible]	[illegible]	816-0081	[illegible]	
	[illegible]	[illegible]	254-0013	[illegible]		[illegible]	839-0812	[illegible]	
	[illegible]	[illegible]	229-1122	[illegible]		[illegible]	803-0814	[illegible]	
[illegible]	[illegible]	[illegible]	400-0049	[illegible]	[illegible]	[illegible]	856-0817	[illegible]	
[illegible]	[illegible]	[illegible]	422-8006	[illegible]	[illegible]	[illegible]	870-0913	[illegible]	
	[illegible]	[illegible]	410-0062	[illegible]	[illegible]	[illegible]	862-0975	[illegible]	
	[illegible]	[illegible]	430-0803	[illegible]		[illegible]	863-0021	[illegible]	
[illegible]	[illegible]	[illegible]	399-0002	[illegible]	[illegible]	[illegible]	880-0007	[illegible]	
	[illegible]	[illegible]	388-8014	[illegible]	[illegible]	[illegible]	890-0064	[illegible]	
[illegible]	[illegible]	[illegible]	454-8721	[illegible]		[illegible]	894-0035	[illegible]	
	[illegible]	[illegible]	444-0065	[illegible]	[illegible]	[illegible]	900-0002	[illegible]	
	[illegible]	[illegible]	440-0086	[illegible]		[illegible]	906-0013	[illegible]	

[illegible]

[illegible]※[illegible] 9[illegible] 6[illegible] ※[illegible] 10[illegible] 5[illegible] ([illegible])
[illegible] [illegible] 043-299-8021 FAX 043-299-8280 [illegible] 261-8520 [illegible] 1-9-2
[illegible] [illegible] 06-6794-8021 FAX 06-6792-5993 [illegible] 581-8585 [illegible] 3-1-72

□ □

□□□□□□
15□(□□38cm) TFT□□□□□□
□□□□□
XGA 1024×768
□□□□□
□1619□□(6□□□+FRC)
□□□□□
□□0.297mm×□□0.297mm
□□□□
260cd/m²
□□□□□□□
350□1
□□□
□□160°　□□150°□□□□□□□□□≧5□
□□□□□□□
□304.1mm×□228.1mm
□□□□□□
□□□□RGB(0.7Vp-p□□75Ω□
□□□□□□
□□/□□□□□□□□(TTL□□/□□□□□□□□
□□□□□□□□□□□□□□□□□□(TTL□□/□□
□□□□
□□□□□□□□□□□VGA/SVGA□□□XGA
□□□□□□□□□□[□□□□(□□□)]
※□□□□□□□1□1□□□□□□□□□□□□(□
□□)□□□□□□□□□□□□□□□□
□□□□□□□
VESA DDC1/DDC2B□□
□□□□□□□□□□
VESA DPMS□□
□□□□□□□□□□□□
15□□□□D-sub□3□□
□□□□□□□□□□□
□□□□□0□□25°□□□□□□0□□5°
□　□
AC100V　50/60Hz
□□□□□□
5□35℃
□□□□
□□33W(□□□2W□
□□□□
□□338mm×□□□145mm×□□□313mm
□　□
□3.8kg□□□□□□□□□□□□3.2kg□
(□□□□□□□□□□□□□□□)

■□□□□□ (□□mm)

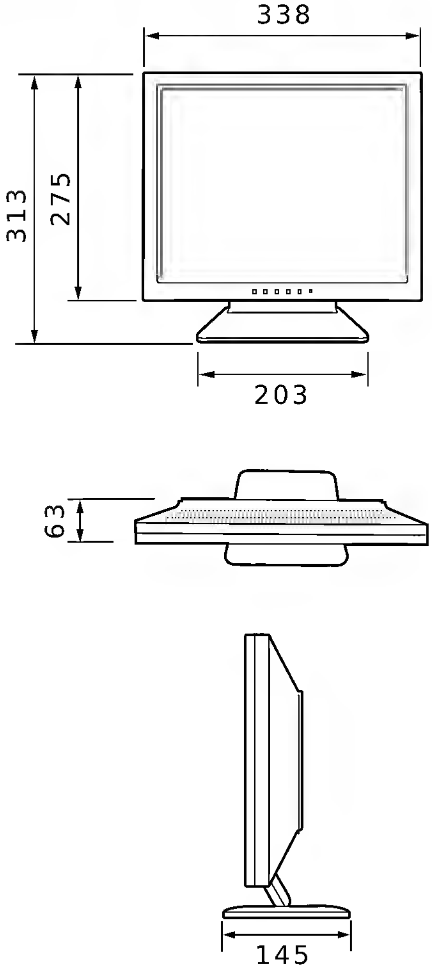

□□□□□□□□□□□□□1.8m
□□□□□□□1.8m

■□□□□□□□□□

□□□□□		□□□□□	□□□□□	□□□□□
VESA (IBM AT □□□) (PC-9800 □□□□)	640×480	31.5kHz	60Hz	25.175MHz
		37.9kHz	72Hz	31.5MHz
		37.5kHz	75Hz	31.5MHz
	800×600	35.1kHz	56Hz	36.0MHz
		37.9kHz	60Hz	40.0MHz
		48.1kHz	72Hz	50.0MHz
		46.9kHz	75Hz	49.5MHz
	1024×768	48.4kHz	60Hz	65.0MHz
		56.5kHz	70Hz	75.0MHz
		60.0kHz	75Hz	78.75MHz
PC-9800 □□□□	640×400	24.8kHz	56.4Hz	21.053MHz
		31.5kHz	70Hz	25.175MHz
US TEXT	720×400	31.5kHz	70Hz	28.3MHz
Power Macintosh □□□□	640×480	35.0kHz	66.7Hz	30.2MHz
	832×624	49.7kHz	74.6Hz	57.3MHz
	1024×768	60.2kHz	75Hz	80.0MHz

□□□□□□□ 1024 × 768 □□□
□□□□□□□□□□□□□□□□□□□□□□□□□□□□□
□Power Macintosh□□□□□□□□□□□□□□□□□□
□ Power Macintosh□□□□□□□□□□□□□□□□□ Macintosh□□□□□□□□□□□□□□□□□□□□□□□□□
□□□
□□□□□□□□(□□□□)□□□□□□□□□□□□□□□□□□□□□□□□□□□□□□□
□□□□□□□ 640 × 400 □□□□□□□□□□ □□□□□720 × 400□□□□□□□□□□□□□□□□□

■□□□□□□□□□

□□□D-sub15□□□

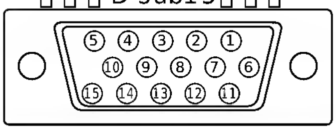

□□	□ □	□□	□ □
1	□□□□□□□□	9	□5V
2	□□□□□□□□	10	GND
3	□□□□□□□□	11	N.C.
4	GND	12	DDC□□□
5	GND	13	□□□□□□□□□□□
6	□□□□□□□GND	14	□□□□□□□□□□□
7	□□□□□□□GND	15	DDC□□□□
8	□□□□□□□GND		

■□□□□□□□□□□

□□□□VESA□ DPMS(※ 1)□ Energy Star(※ 2)□□□□□□□□□□
□□ VESA□ DPMS □□□□□□□□□□□□□□□□□□□□□□□

※ 1 DPMS□Display Power Management Signaling

DPMS□□□	□□	□□□□	□□ □□	□□ □□
ON STATE	□□	33W	□□	□□
STANDBY	□□□	2W	□□	□□
SUSPEND			□□	□□
OFF STATE			□□	□□

※ 2 Energy Star□

□□□
□□(□□)□□□□□□□□□□□□□□□□□□□□

■ DDC(□□□□□□□□)

□□□□VESA□ DDC(Display Data Channel)□□□□□□□□□□□□□□□□
DDC□□□ DDC□□
DDC□□□□□□□□□□□□□□□□□□□□□□□□□□□□□□□□□□□□□□□DDC1□ DDC2B□□□□□□□□□□

VESA

VESA

※

VESA
75 × 75mm

1.
2.
3.
4.

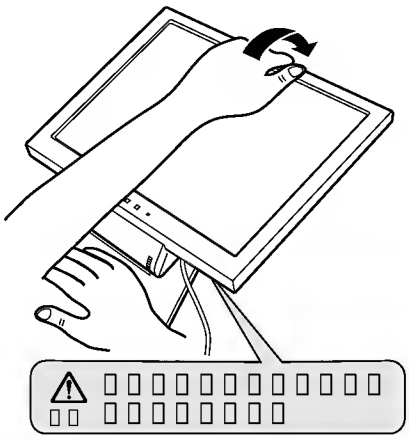

※

5.

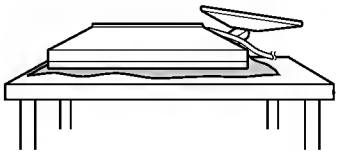

6.

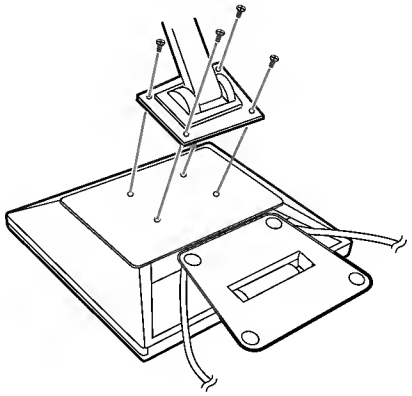

8 10mm
8
10mm M4

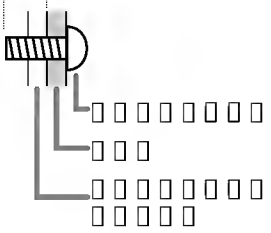

7.

? Memo

①

②

③

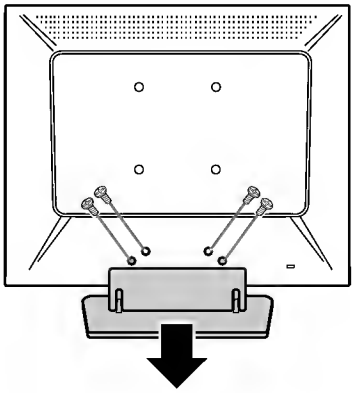

※

※

④ 6.

		TEL 043-299-8021	FAX 043-299-8280
		TEL 06-6794-8021	FAX 06-6792-5993

http://www.sharp.co.jp/lcdmonitor/

(2002 11)

545-8522 22 22
639-1186 492

Printed in Taiwan
P/N : 0NIT15G3-0002 ②
1925-1300-4311